KENT A. HEALY
P.O. Box 128
West Tisbury, MA 02575

September 22, 2011

Chilmark Selectmen
P.O. Box 119
Chilmark, MA 02535

MENEMSHA PIER

WAVE WALL DAMAGE

Hurricane Irene brought strong winds and high tides and currents to Menemsha. After the storm it was found that 2 sheets of the wave wall had become damaged. One sheet was off the waler and sunk along side of the wall. The other was swinging in the current held only by its interlocking knuckle with the abutting sheet. Once the hole was opened current scoured a hole nearly to the bottom of the sheet.

We feel the most likely cause of this failure was the wave wall being hit during the storm with floating debris, an old piling picked up by the high tide could have easily done this damage. An inspection of the entire wave wall showed no other signs of distress of fatigue. When the sheets were ripped out the neighboring bolts were put under a lot of additional stress with no signs of damage.

WAVE WALL REPAIR, SUGESTED PROCEDURE

1. The remaining damaged sheeting must be removed. This will probably require jacking or using a come along to lift up the damaged sheet pieces and cutting them off in sections as necessary.
2. Install 2 new sheets, 12' long and interlocked together. The bottom of the sheets would be set in place then the sheet would be stood up against the waler. Part of the interlocking grove will be cut off to allow the new sheet to get into place without interlocking with the existing sheets. It may be possible to jack them down into the bottom a few inches, and it may be necessary to cut off excess length. The new sheets should be bolted to the waler with ½" bolts and oversize washers. Where a bolt cannot be used, 2, 5/8"X6" lag bolts should be used.
3. Install 2X6 pressure treated waler, backing blocks and 1/2" X 24" long galv. bolts for additional support.
4. Backfill the scour hole. ¾" gravel should be used to fill against each side of the new sheet to cover at least the bottom 4' of the sheet. This could be done by dumping gravel into temporary chutes on each side of the connector pier and configured to direct the gravel to the scour hole and new sheeting. Goodale construction can deliver gravel in a concrete mixer and dispense the gravel into the chutes below. ± 20 cu yds of gravel will be used. Larger rocks and stones can then be placed onto the gravel surface for additional erosion protection.

Sincerely,

Kent A. Healy

Kent A. Healy, P.E.

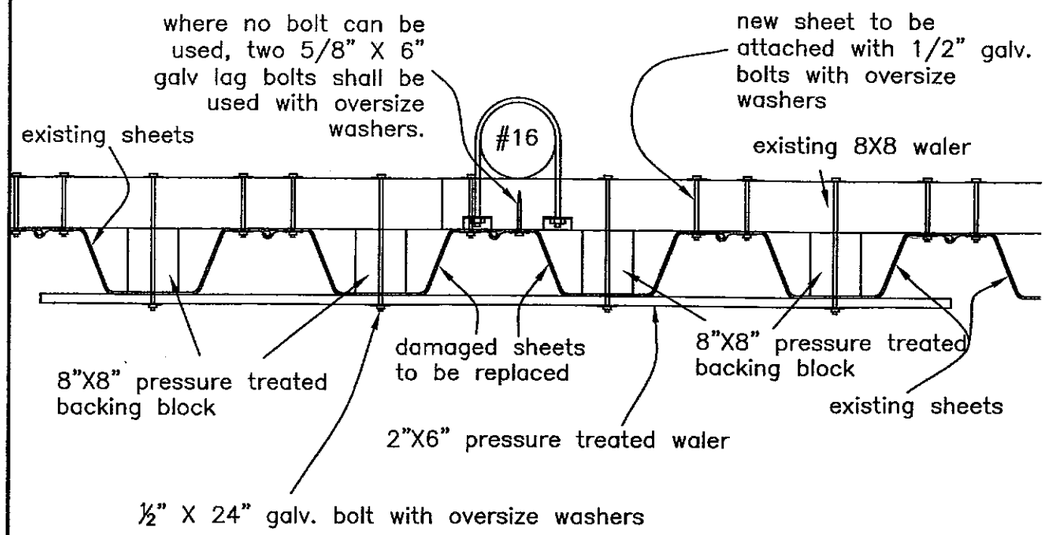

PLAN VIEW 1" = 2'

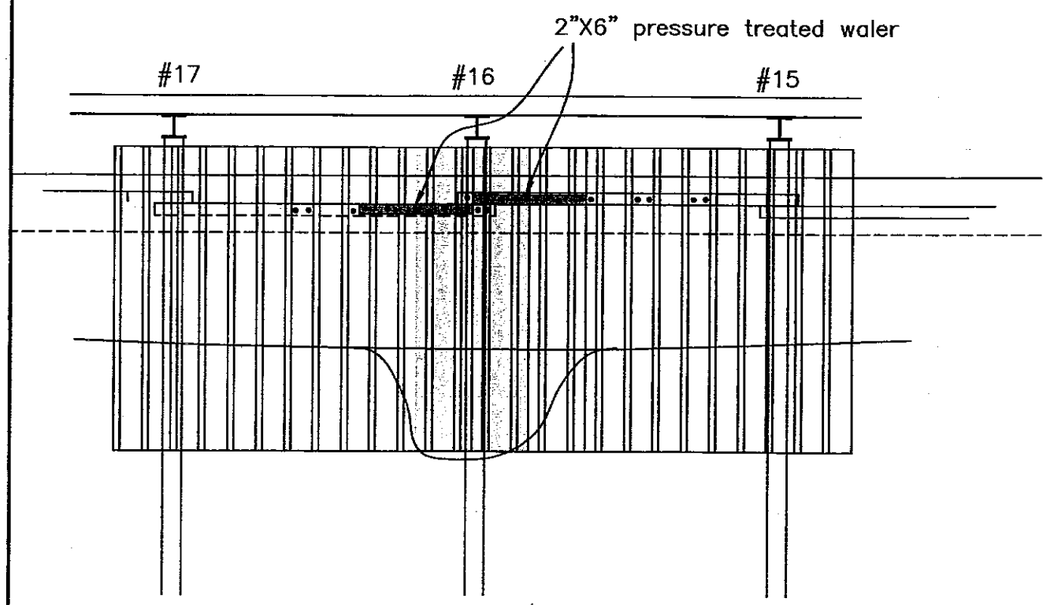

PROFILE VIEW 1" = 8'

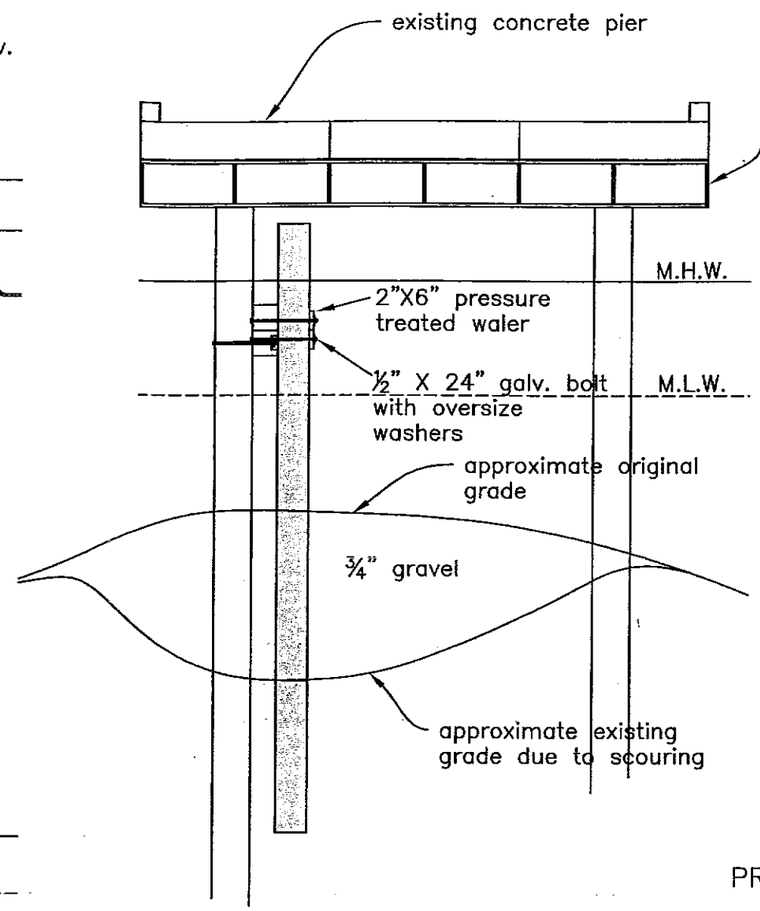

CROSS SECTION 1" = 4'

NOTES:
original sheet was specified to be ShoreGuard GG–50
This is the same as CMI Sheet Piling UC–50

It may be necessary to cut off part of the interlocking knuckle on the side of the new sheet to install it.

The original sheets were specified as 16 ft. long. The new sheet may need to be cut shorter to fit in the scoured out hole.

The bottom of the new sheet must be held in place by backfilling the scour hole with gravel and material that will not be carried away with the current. Care must be taken not to stress the sheet by putting large stones against it in the backfill.

PROPOSED CONNECTOR PIER
IN MENEMSHA BASIN
CHILMARK, MASS.
Prepared For
THE CHILMARK SELECTMEN
September 6, 2011
Revised Sept. 20, 2011
Revised Sept. 22, 2011

VINEYARD LAND SURVEYING & ENGINEERING, INC.
12 Coumoyer Road, P.O. Box 421 West Tisbury, MA 02575
P 508.693.3774 F 508.693.8575