TRANSIENT PIER, MENEMSHA BASIN, CHILMARK, MASS.

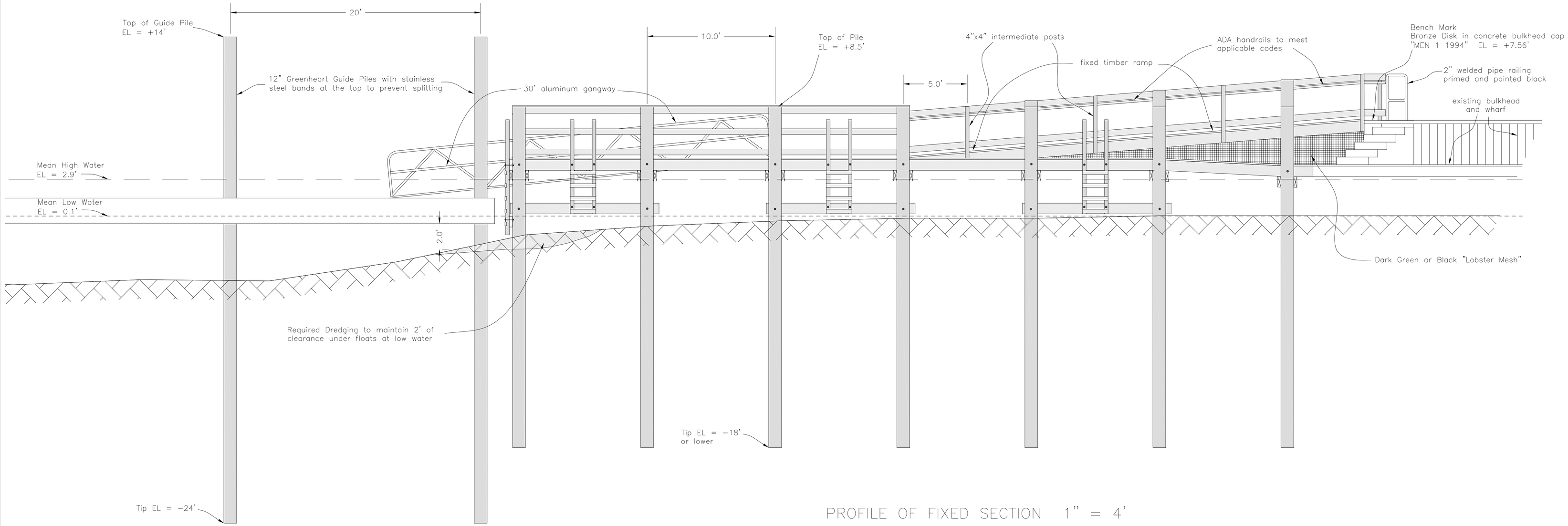

PROFILE OF FIXED SECTION 1" = 4'

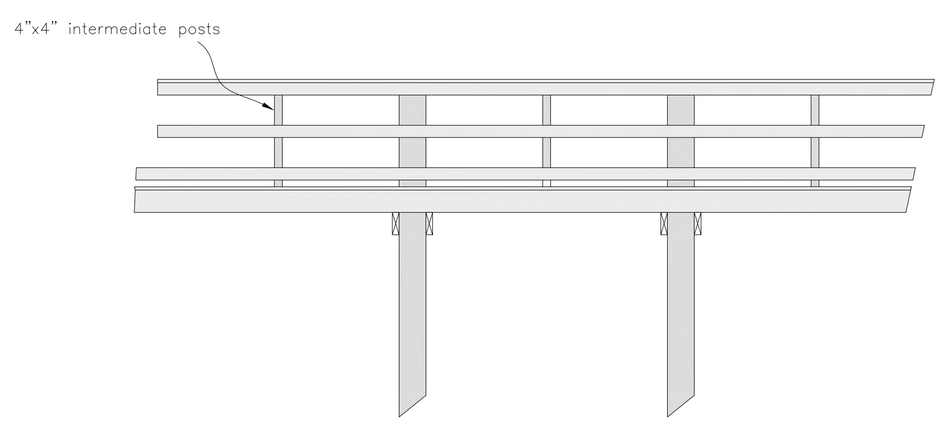

RAILING DETAILS 1" = 4'

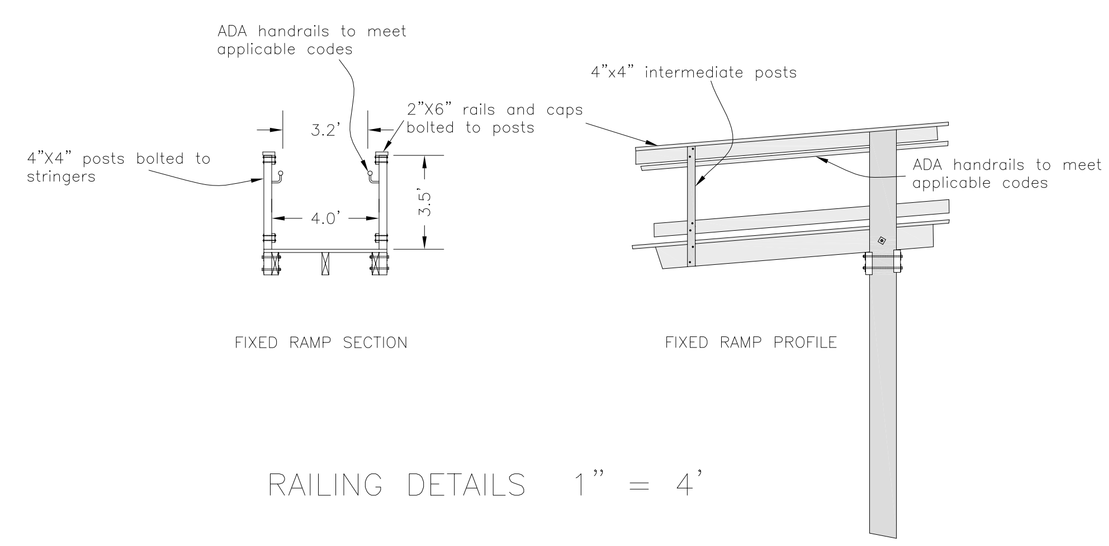

RAILING DETAILS 1" = 4'

All bolts fastening railings to posts shall be 3/8" galv.

All bolts fastening posts to stringers shall be ½" galv.

All lags fastening railings to piles shall be ⅜" X 4" galv.

All screws fastening the rail cap shall be 3 ½" stainless timberlocks or equivalent

GRAPHIC SCALE

4 0 2 4 8 16

(IN FEET)
1 inch = 4 ft.

Pier Plan in
CHILMARK, MASS.
Prepared For
THE CHILMARK SELECTMEN
Scale 1" = 4'
August 10, 2012

VINEYARD LAND SURVEYING & ENGINEERING, INC.
12 Coumoyer Road, P.O. Box 421 West Tisbury, MA 02575
P 508.693.3774 F 508.693.8575

Job No. 1130-2