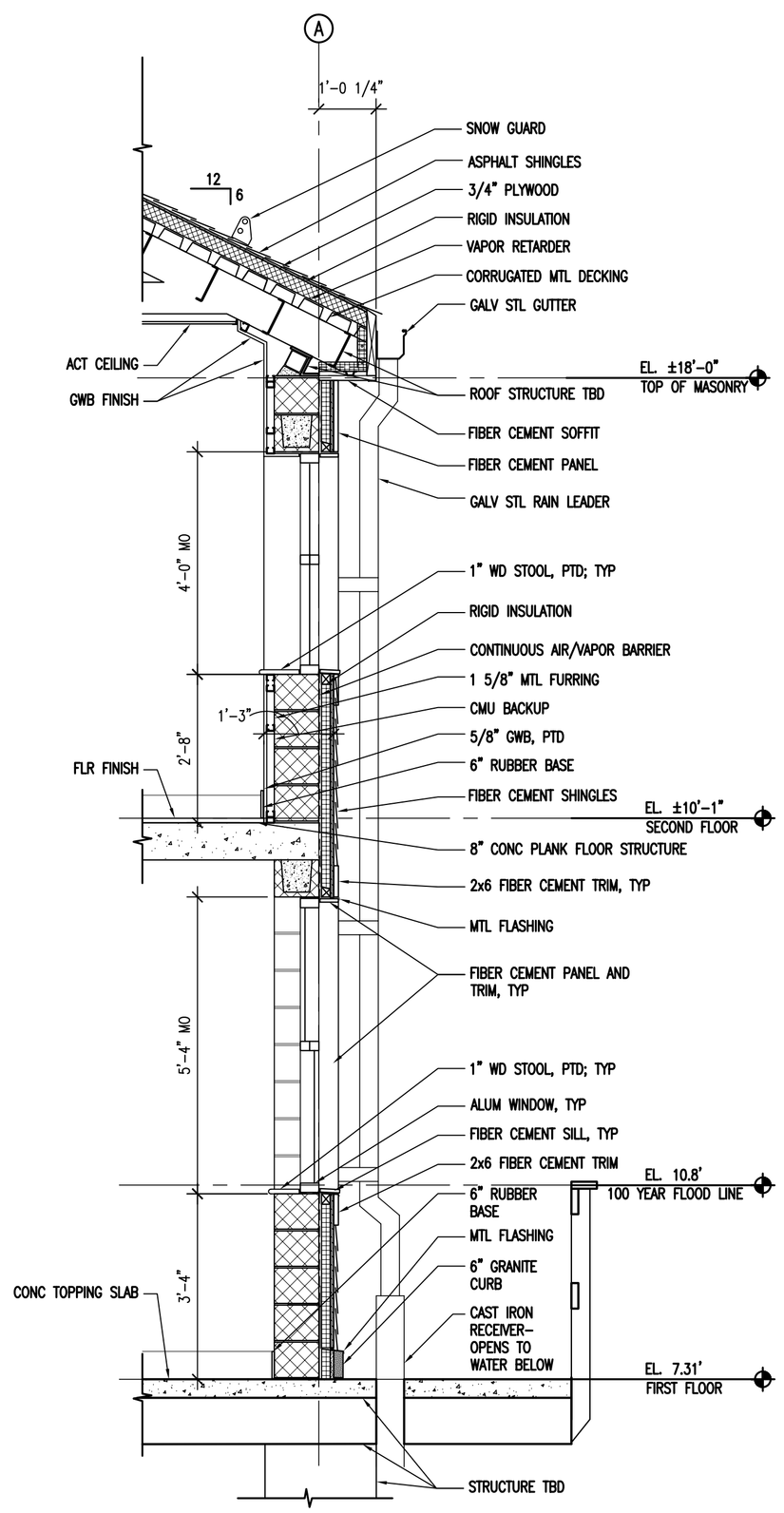

3 TYP WALL SECTION
SCALE: 1/2"=1'-0"

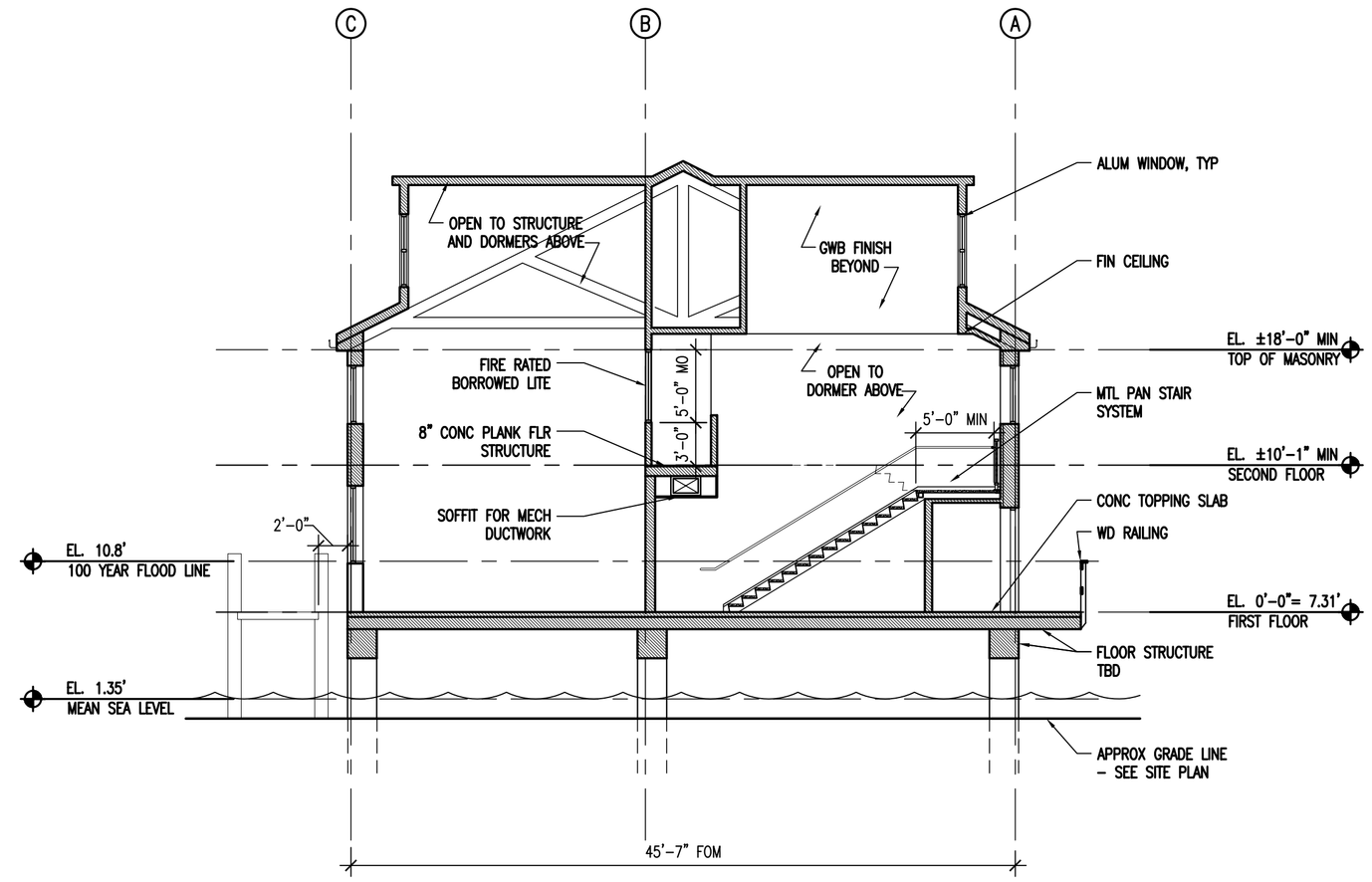

2 BUILDING SECTION
SCALE: 1/8"=1'-0"

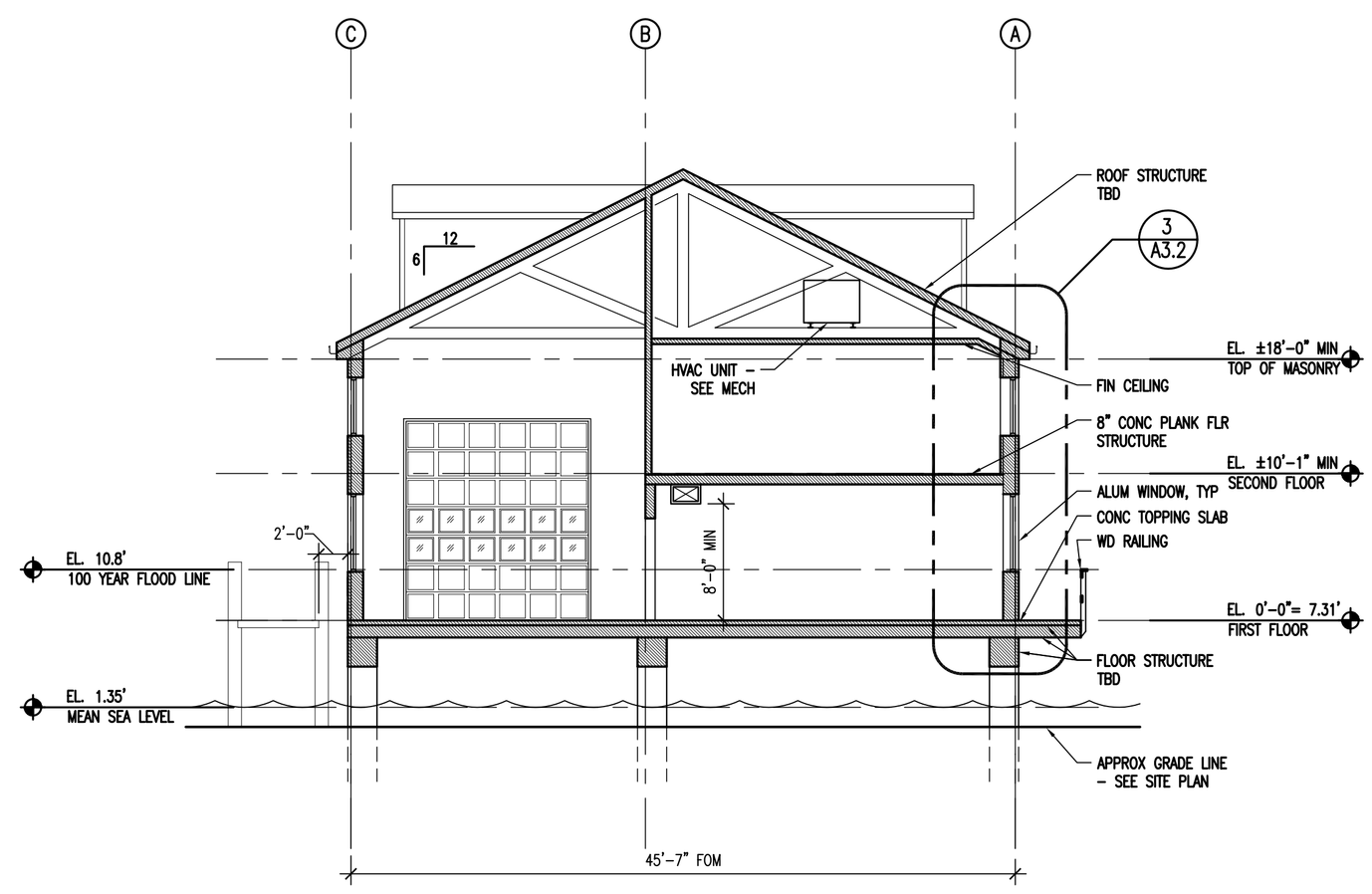

1 BUILDING SECTION
SCALE: 1/8"=1'-0"

1/2" = 1'-0" 0 1 2 4 FT

1/8" = 1'-0" 0 4 8 16 FT

CONSULTANTS

U. S. COAST GUARD
FACILITIES DESIGN &
CONSTRUCTION CENTER

5505 ROBIN HOOD ROAD SUITE K
NORFOLK, VIRGINIA 23513-2431

ISSUE		
MARK	DATE	DESCRIPTION

A/E PROJECT NO:	
CAD FILE NAME:	AXXXXXX.dwg
DESIGNED BY:	JT
DRAWN BY:	JT
EDITED BY:	CDB
CHECKED BY:	CDB

SCALE:AS NOTED (D-size) 1 : 1

SHEET TITLE

BOATHOUSE REPLACEMENT
MENEMSHA
MARTHA'S VINEYARD MA

ARCHITECTURAL
BUILDING & WALL SECTIONS

REVIEWED BY:	REVIEWED BY:	REVIEWED BY:
PROJECT EIC	DISCIPLINE	TECH DIRECTOR
		23NOV2011
TEAM LEADER		DATE

PROJECT NUMBER	DRAWING NUMBER
01-3441233	A3.2
DISCIPLINE/SHT NO	
A-302	SHEET X OF XX