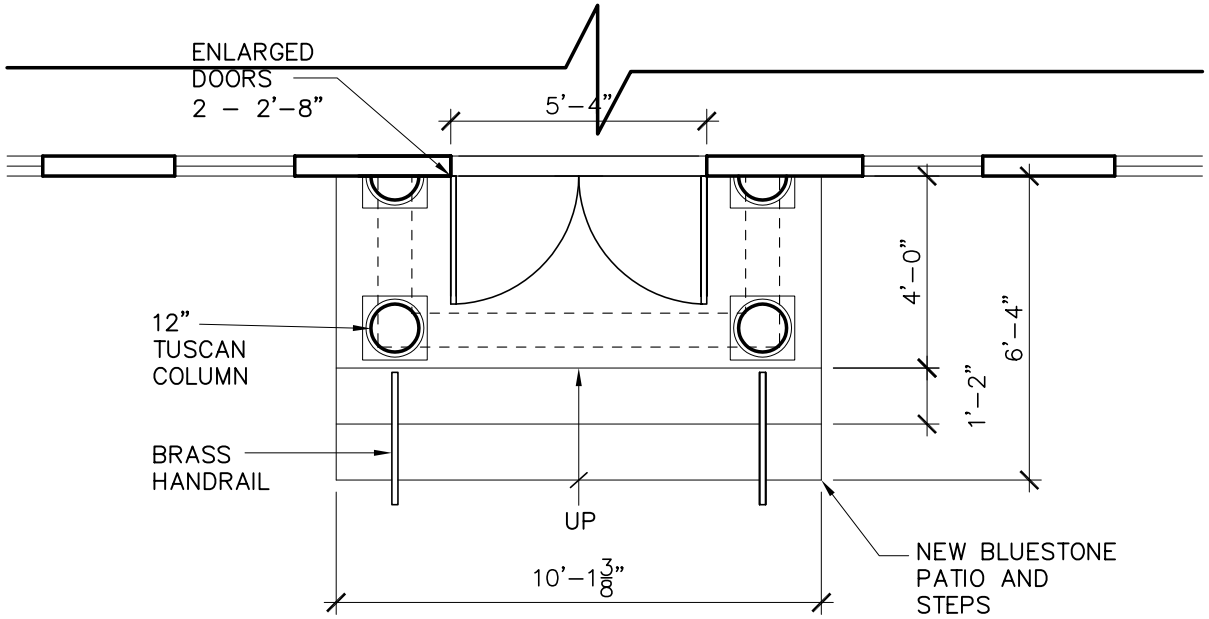
ENLARGED
DOORS
2 – 2'–8"
5'–4"
12"
TUSCAN
COLUMN
BRASS
HANDRAIL
UP
10'–1 3/8"
4'–0"
1'–2"
6'–4"
NEW BLUESTONE
PATIO AND
STEPS