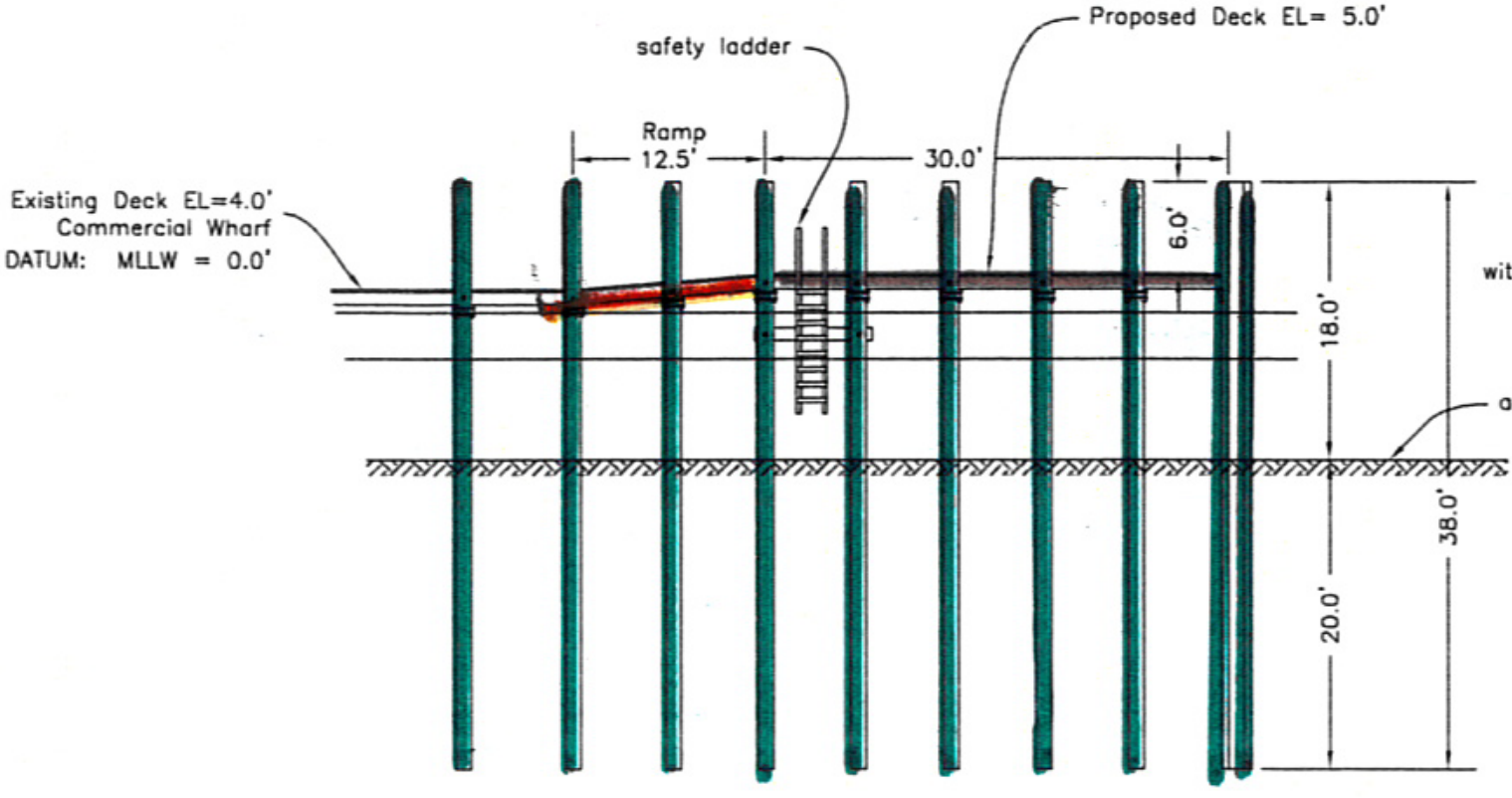
safety ladder
Proposed Deck EL= 5.0'
Ramp
12.5'
30.0'
Existing Deck EL=4.0'
Commercial Wharf
DATUM: MLLW = 0.0'
6.0'
18.0'
38.0'
20.0'
approximate harbor bottom

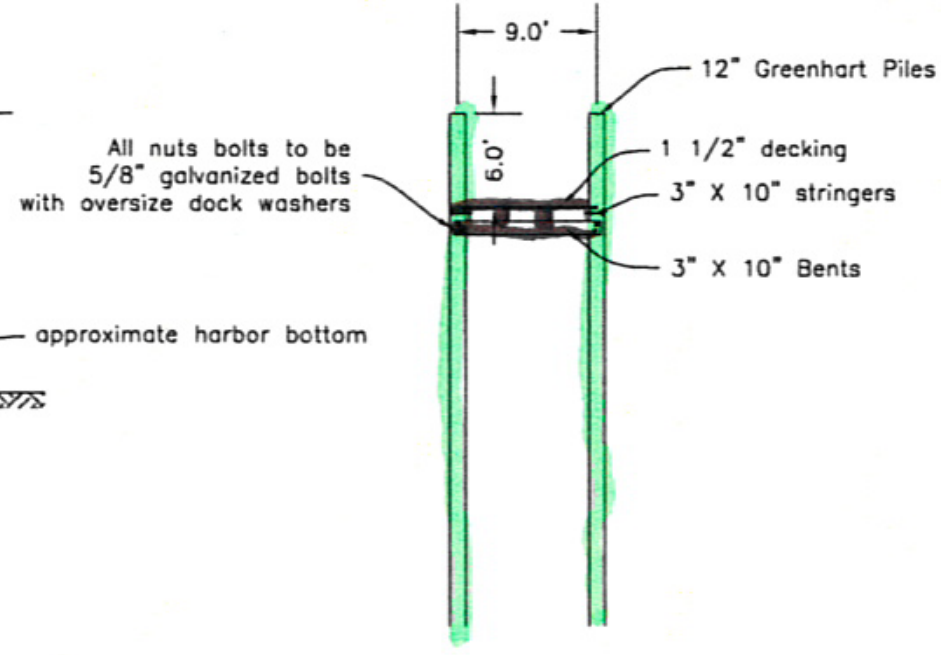
9.0'
12" Greenhart Piles
All nuts bolts to be
5/8" galvanized bolts
with oversize dock washers
6.0'
1 1/2" decking
3" X 10" stringers
3" X 10" Bents